one electron™

# BFT–1
# BFT–1A

## Audio–Grade Power Transformers

## Description

The BFT-1 and BFT-1A are high-quality power transformers designed for tube audio power amplifiers. Originally designed for a stereo amplifier using parallel EL34s and UBT-1 output transformers, the BFT-1 and BFT-1A are well suited for moderate-power tube amplifiers. Special audio-grade features include an electrostatic shield between primary and secondary and a copper flux band to reduce stray hum fields. (Some production versions of the BFT-1 are missing the flux band).

The BFT-1 and BFT-1A were manufactured in the United States to high quality commercial standards. They are protected from moisture by a full vacuum-impregnation with varnish.

The BFT-1 and BFT-1A has been replaced by the BFT-1B. The BFT-1B is physically larger than these earlier models, with greater design margins. The BFT-1B and BFT-1A have a simpler primary winding arrangement. All types have the same performance specifications. The data listed here is for reference. For specifications and application information, see the BFT-1B data sheet.

## Specifications (different than BFT-1B)

Size: 3.75" x 4.5" x 5.25" (95 x 114 x 133 mm)

Weight: Approx. 12 lbs (5.5 kg)

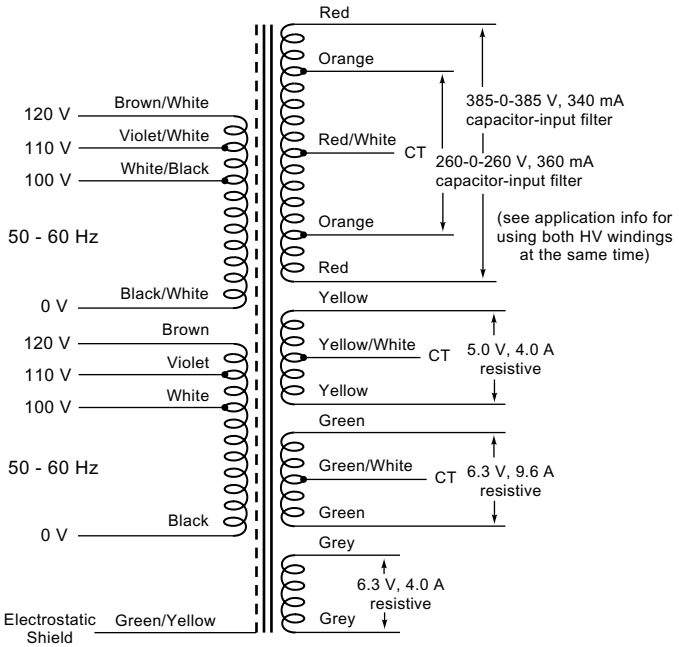


BFT-1

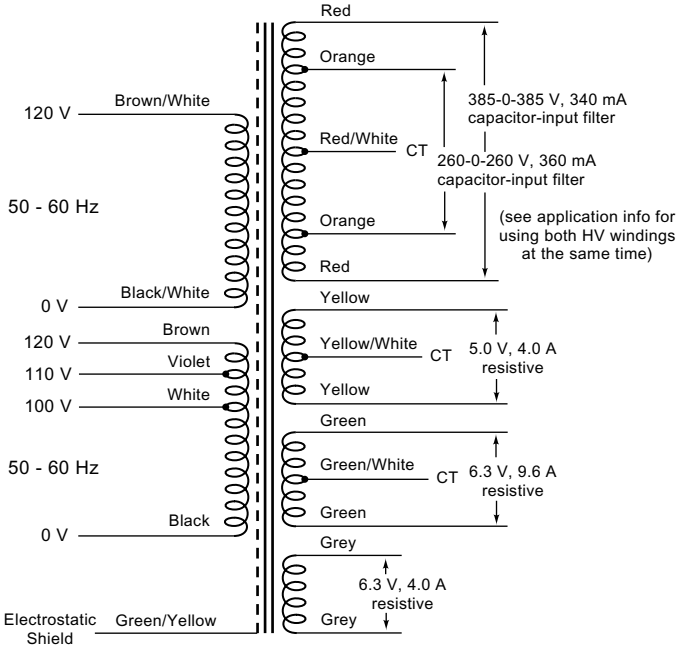


BFT-1A, B

## BFT-1, BFT-1A Dimensions

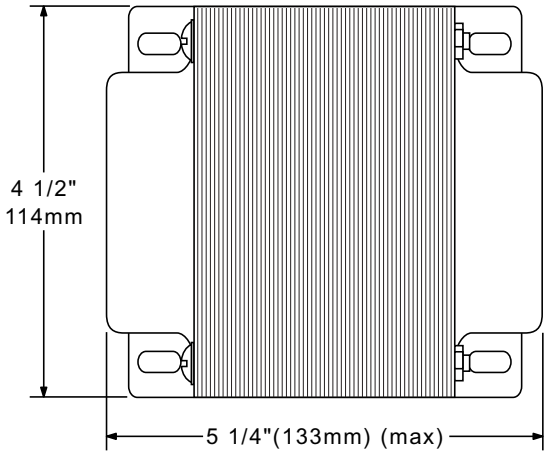


Top View

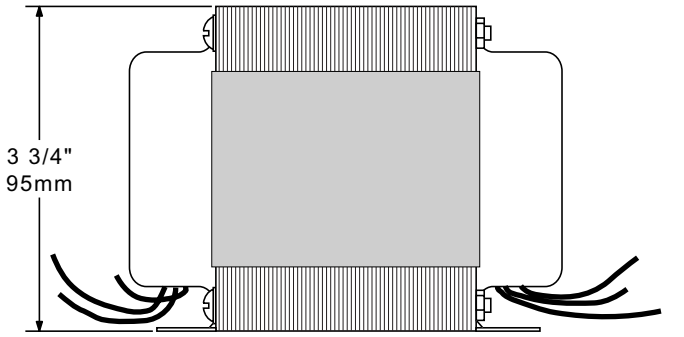


Side View

Lead Lengths:
15 " (380 mm)

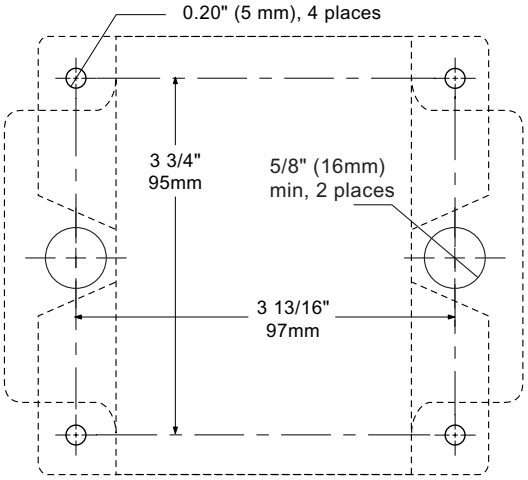


BFT-1, BFT-1A Mounting Hole Footprint

one electron™
P.O. Box 1000
Yerington, Nevada 89447 USA
www.one-electron.com

*One Electron Transformers are exclusively distributed by:*

**Antique Electronic Supply**
**6221 South Maple Avenue**
**Tempe, Arizona 85283 USA**
**Tel: 1-480-820-5411**
**FAX: 1-480-820-4643 or 1-800-706-6789**
**www.tubesandmore.com**