F Gordon

N.V. PHILIPS' GLOEILAMPENFABRIEKEN
EINDHOVEN

VERSLAG Nr 44.

Laboratorium:

Onderwerp: Measurement of secondary emission from fluorescent screens of picture tubes.

Bewerkt door: A.C. Kleisma.

Dit Verslag blijft eigendom der N.V. Philips' Gloeilampenfabrieken te Eindhoven. Zonder haar schriftelijke toestemming mag het noch in zijn geheel, noch ten dele gecopieerd of aan enige derde ter hand gesteld of getoond worden. Evenmin is het geoorloofd aan zulk een derde enige mededeling te doen aangaande dit Verslag of hetgeen, waarop het betrekking heeft. Bij overtreding zal de N.V. Philips' Gloeilampenfabrieken onverwijld aangifte doen van inbreuk op de betreffende strafbepalingen onverminderd hare rechten op schadevergoeding.

PROPERTY AND COPYRIGHT
RESEARCH LABORATORIES
N.V. PHILIPS' GLOEILAMPENFABRIEKEN
EINDHOVEN — NETHERLANDS

Reproduction or disclosure to third parties, in any form whatsoever, without written consent is forbidden.

EIGENTUM UND COPYRIGHT
FORSCHUNGSLABORATORIUM
N.V. PHILIPS' GLOEILAMPENFABRIEKEN
EINDHOVEN — DIE NIEDERLANDE

Nachdruck oder Einsichtnahme durch Dritte, in jedweder Form, ist nur mit schriftlicher Genehmigung gestattet.

PROPRIÉTÉ ET COPYRIGHT
LABORATOIRES DE RECHERCHE
N.V. PHILIPS' GLOEILAMPENFABRIEKEN
EINDHOVEN — PAYS BAS

La reproduction ou la communication à des tiers, sous quelque forme que ce soit, n'est autorisée qu'après consentement écrit.

MEASUREMENT OF SECONDARY EMISSION
FROM FLUORESCENT SCREENS OF PICTURE TUBES

Introduction

With anode voltages of 9 to 14 kV, at which direct view television tubes are used, there is a possibility that the secondary emission ratio of the phosphor decreases during life to less than unity, with the consequence that screen sticking occurs. Under working conditions the secondary emission ratio always tends to adjust itself to unity.

If the secondary emission curve is as shown in fig. 1 where for $Va = V1$ and $Va = V2$ the secondary emission ratio δ is unity and if the anode voltage $Va = V3$ $(V3 > V2)$, the screen will be at a potential approximately $V3 - V2$ negative with respect to the anode. For various reasons this phenomenon is very undesirable. The anode voltage at which the negative screen potential occurs and the increase of the latter with increase of Va can be measured simply with suitable means outside the bulb. This measurement can, of course, reveal nothing of the possibility of sticking during life as a new tube will generally show no sticking below 16 kV. It is, however, quite possible with such a tube, that the secondary emission ratio at the operating voltage only slightly exceeds unity, so that after some hundreds of hours sticking occurs. In order to be able to judge this beforehand, it is necessary to know the variation of the secondary emission of the phosphor as a function of the anode voltage. This curve also makes it possible to judge various phosphor tests.

Method of measurement

A method of measuring the secondary emission of the phosphor of a cathode ray tube will now be described.

As the measurement must be carried out outside the tube and in the normal operating condition, and as the secondary emission ratio $\delta = \frac{Is}{Ip}$ of the screen tends to adjust itself to unity, a "dynamic" measurement method must be employed.

With the screen potential measurement method used up to now, use has been made of the finite resistance of the screen glass. With the dynamic secondary emission measurement, use is made of the capacitance formed by the phosphor layer and a metal plate against the bulb glass, the glass acting as a dielectric. When the diameter of the electron beam is d and the glass thickness D, this capacitance is

$$C_a = \frac{1}{16} \varepsilon \frac{d^2}{D} \tag{1}$$

Assuming that the dielectric constant ε of the glass is 7 and the glass thickness is 0.6 cm,

$$\text{then} \quad C_a = 0.7\, d^2 \,.\text{cm} \tag{2}$$

This capacitance is very small and of the order of some μuF. The metal plate is earthed via a resistor R; see fig. 2.

The current passing through this resistor is the charging current of the capacitor C_s and is always equal to the difference between the secondary emission current and the primary beam current,

$$\text{thus} \quad I_R = I_s - I_p \tag{3}$$

Thus the voltage across the resistor R is :

$$V_R = I_R . R = R\,(I_s - I_p) \tag{4}$$

Fig. 3 shows the equivalent circuit of fig. 2.

It appears from these figures that the instantaneous screen potential is

$$V_s = V_{so} + \frac{1}{C_{so}} \int^{t} I_R \, dt + V_R$$

where V_{so} is the initial potential.

$$\text{as} \quad I_R = \frac{V_R}{R} :$$

$$V_s = V_{so} + \frac{1}{RC_{so}} \int^{t} V_R \, dt + V_R \tag{5}$$

In the equilibrium which theoretically occurs after an infinitely long time $V_R = 0$ and thus

$$V_{s\infty} = V_{so} + \frac{1}{RC_{so}} \int^{\infty} V_R \, dt \tag{6}$$

By measuring the potential V_R at the resistor R, $I_s - I_p$ is also measured according to (4).

As V_R is small and rapidly changes in the method used, it must be observed with an oscillograph.

I_p is constant during the measuring period, whilst I_s changes and finally becomes equal to I_p. We shall term the secondary emission current, occurring when all secondaries leave the screen and consequently determine a point of the secondary emission curve, the effective secondary emission I_s eff.

The secondary emission ratio of the phosphor can thus be determined as

$$\delta = \frac{I_s \text{ eff}}{I_p} \tag{7}$$

This can be expressed in the equation

$$\delta = \frac{(I_s \text{ eff} - I_p) + I_p}{I_p} \tag{8}$$

By taking suitable measures, the measurement can be done in such a way that Is eff - Ip and Ip can be measured from one oscillogram, so that δ can be calculated with the aid of (8).

I_s eff - I_p can be determined at a moment when the difference between screen potential and anode potential $V_s - V_a$ is sufficiently negative.

At this condition all secondaries released reach the anode as a consequence of the attracting anode field.

I_p can be measured, however, by making $V_s - V_a$ sufficiently positive. All secondaries are retarded and repelled back to the screen. I_s is then zero and the resulting current through R is then $-I_p$.

These special conditions can exist only a short time, as by the increase or decrease of the charge, the screen will have reached practically its stable potential within a time of 20 μ sec. and $I_s - I_p$ will then have become 0.

The various switchings must be done by short pulses with steep fronts.

The arrangement is as follows:

Positive pulses with a duration of 20 μ sec. are applied to the grid of the tube to be examined.

The repetition frequency is 5000 c/sec. The tube is operated without focusing and deflection.

The anode is earthed in our arrangement. The voltage $V_s - V_a$ is switched with half the frequency i.e. 2500 c/s. The required pulses have an amplitude of 100 Volt and are synchronised with the grid pulses in such a way that the middle of an anode pulse coincides with the middle of a grid pulse.

The anode pulses are positive and wider than the grid pulses. Thus they start earlier and end later than the grid pulses (see fig. 4).

The grid pulse controls a single stroke time base for the oscillograph, so that the latter has a horizontal deflection during the grid pulse only.

Thus on the oscillograph are only observed voltages across R which occur during the grid pulses.

The anode voltage is switched outside the measuring time interval and this is necessary as owing to the anode-screen capacitance strong differentiated pulses across R occur which disturb the oscillogram. See fig. 5.

The voltage which is taken from R and which therefore is proportional to $I_s - I_p$ is applied to the vertical deflection plates of the oscillograph via a wide band amplifier. Before the amplifier of the oscillograph is a preamplifier which is built in a metal case together with the contact plate owing to which the wiring capacitance parallel to R is small and constant.

Fig. 6 shows a block diagram of the arrangement.

Fig. 7 gives a survey of the currents and voltages occurring in the tube to be examined. With the aid of this survey an explanation is given of the various situations.

<u>Time</u>

<u>t_0</u> : $I_p = 0$, $V_a = 0$, $V_s - V_a$ has a small positive value Vo as a consequence of the equilibrium reached during the preceeding grid pulse.

$$I_R = I_s - I_p = 0$$

<u>t_1</u> : $I_p = 0$, $Va = Va\ max.$, $V_s - V_a = V_o - V_a\ max.$ $\quad I_R = 0.$

Thus V_s is now negative with respect to V_a.

<u>t_2</u> : $I_p = I_p\ max.$ $Va = Va\ max.$ $V_s - V_a = V_o - V_a\ max.$ $\quad I_R = I_R\ max.$

Time

t_3 : $I_p = 0, V_a = V_a$ max. $V_s - V_a = V_o$ $I_R = 0$

During the pulse time interval $t_2 - t_3$, I_R has decreased from I_R max. to 0. $V_s - V_a$ has increased from $V_o - V_a$ max. to V_o.

The variation of $I_R = I_s - I_p$ is displayed on the oscillograph as shown in fig.8 as the time base of the oscillograph has made a displacement.

The curve rapidly reaches a maximum value.

At this moment all the secondaries released reach the anode as $V_s - V_a$ is sufficiently negative.

In this condition the resulting secondary emission current is thus the effective secondary emission I_s eff at the adjusted primary beam velocity.

The maximum value of the curve is thus proportional to I_s eff $- I_p$.

As $\frac{I_s}{I_p}$ is greater than unity, the screen gets a positive charge owing to which $V_s - V_a$ becomes less negative. The slowest secondaries start then to return to the screen, bending the top of the curve downwards. As the $V_s - V_a$ becomes more and more negative, more and more secondaries return to the screen so that $I_s - I_p$ becomes smaller and smaller, to reach finally zero at a small positive $V_s - V_a = V_o$.

t_4 : $I_p = 0$, $V_a = 0$, $V_s - V_a = V_o + V_a$ max. $I_R = 0$.

The anode voltage has decreased from V_a max. to 0, causing the voltage $V_s - V_a$ to increase to $V_o + V_a$.

(It is assumed that in the time between the pulses no charge flows away from the screen along the insulation leakage).

t_5 : $I_p = I_p$ max., $V_a = 0$, $V_s - V_a = V_o + V_a$ max. $I_R = -I_R$ max.

t_6 : $I_p = 0$, $V_a = 0$, $V_s - V_a = V_o$, $I_R = 0$

During the pulse time interval $t_5 - t_6$, I_R has increased from $-I_R$ max. to 0. $V_s - V_a$ has decreased from $V_o + V_a$ max. to V_o.

The curve $I_R = f(t)$ displayed on the oscillograph during this period is shown in fig. 9.

The negative maximum of I_R is $-I_p$, as $V_s - V_a = V_o + V_a$ max. thus so much positive that no secondaries are released from the screen. This condition is maintained until, owing to the supply of negative charge to the screen by I_p, the potential difference $V_s - V_a$ has decreased so much that the fastest electrons can leave the screen and reach the anode. $I_s - I_p$ will then increase until the value 0 has been reached.

$V_s - V_a$ has then become again V_o.

At the time t_7 the condition is equal to that of t_1 and the cycle is repeated.

On the screen of the oscillograph both curves of the fig. 8 and 9 are always present. See fig. 10.

By measuring the heights of I_s eff $- I_p$ and I_p, the secondary emission ratio of the phosphor can now be calculated from the relation:

$$\delta = \frac{(I_s\ \mathrm{eff} - I_p) + I_p}{I_p}$$

By carrying out this measurement for the whole range of the anode-cathode voltage up to e.g. 15 kV, the points of the secondary emission curve $\delta = f(V_a)$ of the tube are obtained. (See fig. 11).

Fig. 12 shows the curves $\delta = f(V_a)$ of some tubes showing sticking at 9 kV anode-cathode voltage.

The sticking curves $V_a - V_s$ are given in the same figure.

It is clearly to be seen that sticking starts where the secondary emission curves reach unity.

The maximum value of δ appears to be at about 1 kV for all tubes.

The tube under test is adjusted to a maximum Ia of 100 uA, thus Ia average being 10 uA. The amplitude of the anode pulse is 100 Volts.

With this method the secondary emission curve can only be determined for values of $\delta > 1$ as at $\delta = 1$, $I_s - I_p$ is always zero. In this condition no voltage across R will arise. In practice it is not possible to go farther than approximately 1.1 to 1.2.

It is then possible to extend the graph to the point $\delta = 1$.

Measuring apparatus

Pulse generator

The pulse generators and time base used are part of a standard pulse unit with built-in time bases for observing short duration phenomena.

It is possible to make use of a multivibrator for the anode pulses and of a flip-flop circuit for the grid pulses; this circuit is adjusted to double the frequency by means of an oscillograph.

It will be possible to generate a pulse voltage with a multivibrator; the frequency being 2500 /sec, the width 100 μ sec. and the amplitude 100 Volts for pulsing the anode voltage.

This pulse can be applied to the vertical deflection plates of an oscillograph, the time base being adjusted to double the frequency.

In this case use must be made of the internal synchronization of the time base. With this time base a flip-flop circuit can be controlled to generate the grid pulses.

Fig. 13 gives an example of such a circuit.

Time base of the oscillograph.

Fig. 14 shows the circuit of a single stroke time base. The grid pulse is inversed by the valve B1 and thus the valve B2 is cut off.

The capacitor C is now charged via the series resistor R.

The speed of the charging can be controlled with the variable part of R.

Diode B4 and the capacitor C1 provide, together with B3, for the linearity of the charging. At the end of the grid pulse, B2 suddenly becomes conducting and thus C is rapidly discharged across B2. The saw tooth voltage is taken from the potentiometer R_k in the cathode circuit of B3.

Amplifier and oscillograph

The amplifier consists of two parts : a preamplifier and an output amplifier (fig. 15). The former consists of two stages : an amplification stage (valve B1) and a cathode-follower (B2).

If suitably constructed, the preamplifier can be attached to the stand and placed close to the bulb of the tube under test.

The output amplifier consists of two amplifying stages (B3 and B4), a phase inverter valve B5 and a symmetrical output (B6 and B7).

If the amplification per stage is 10x, the total voltage amplification will then be 20,000 x.

The output amplitude can be adjusted with the input potentiometer of the output amplifier.

Correction coils (S1 to S6) are inserted into the anode circuits of the valves.

The supply voltages for the preamplifier are taken from the output amplifier.

The measuring oscillograph is type GM 3152. The output of the amplifier can be connected directly to the vertical deflection plates at the back of the oscillograph.

To obtain an oscillogram with a sufficient brightness and sharpness it is recommended that the cathode ray tube of the oscillograph be given a post acceleration of 1 to 2 kV.

A.C. Kleisma,

26.6.51.

Literature

Kenneth G. McKay Journal of Applied Physics 22, 1.
Kenneth G. McKay Advances in Electronics 1, 65,1948.
R. Barthélemy L'onde électrique Nr.285 December 1950
Howard L Heydt Review of scientific instruments Vol.21, No.7, 1950 p.639.

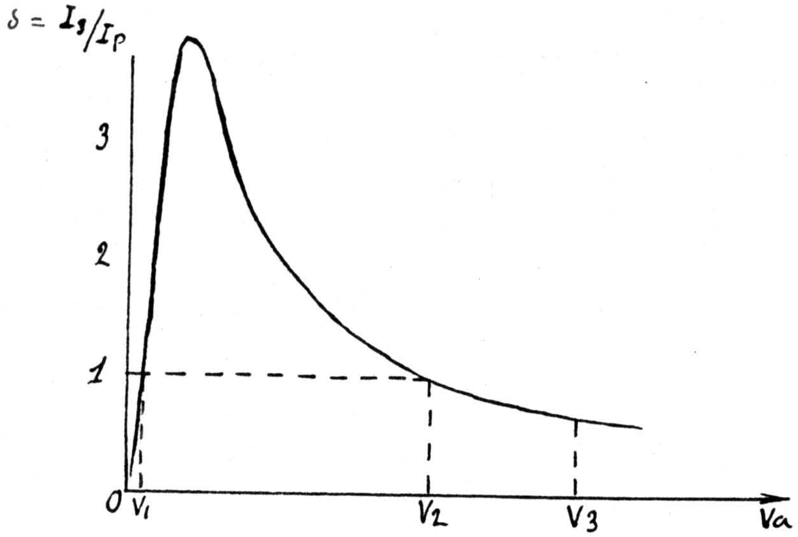

Fig 1

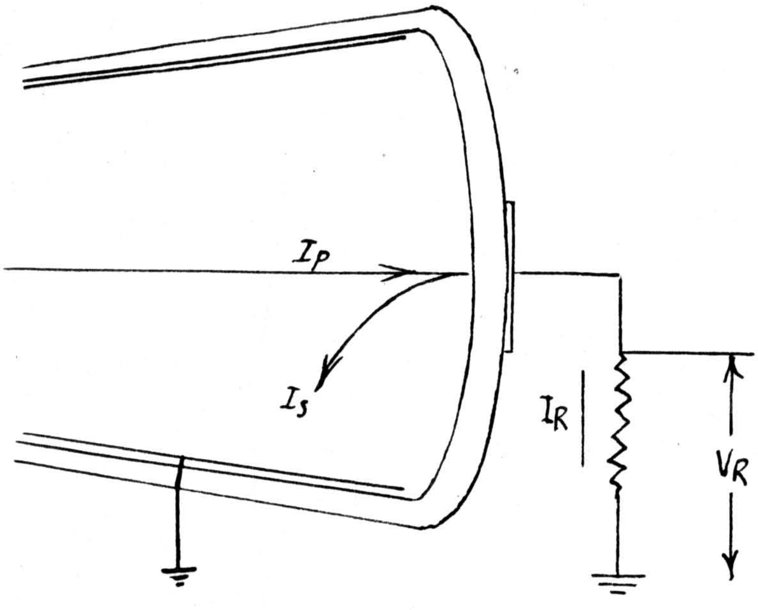

Fig 2

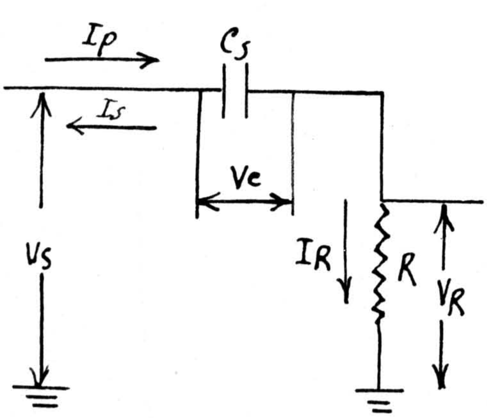

Fig 3

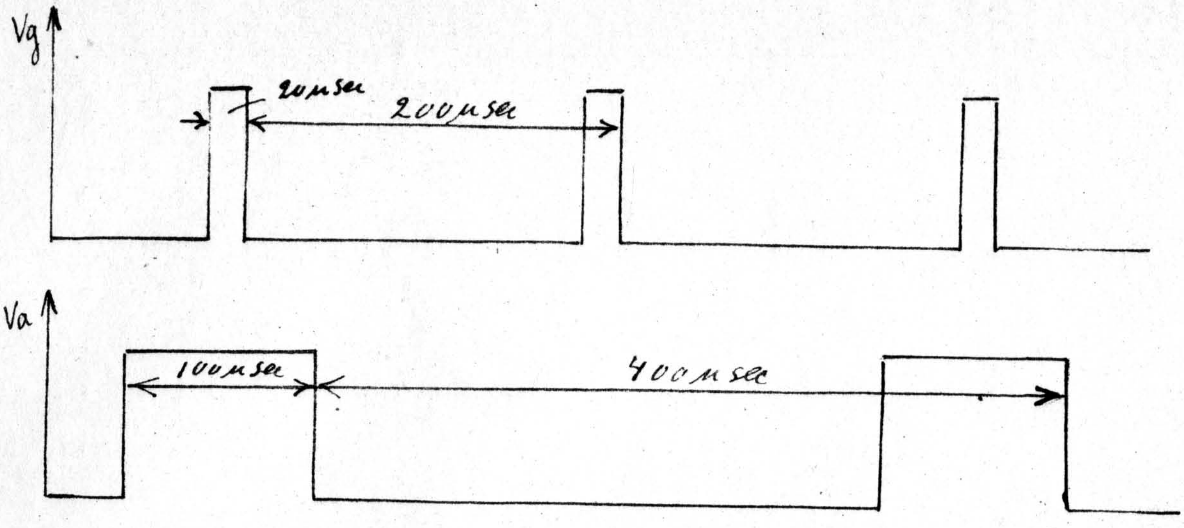

Fig 4

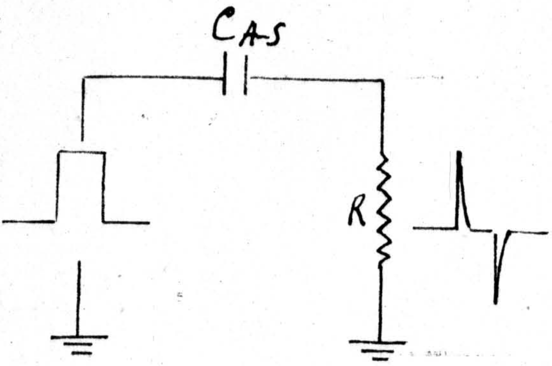

Fig 5

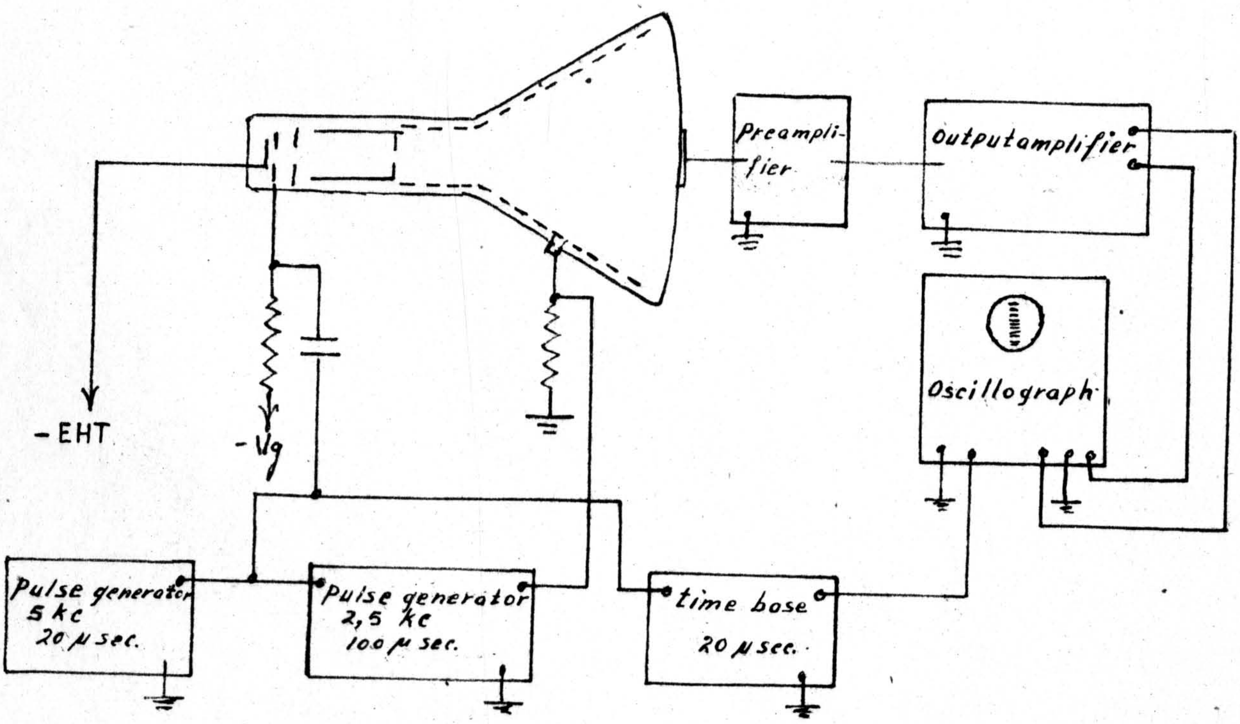

Fig 6

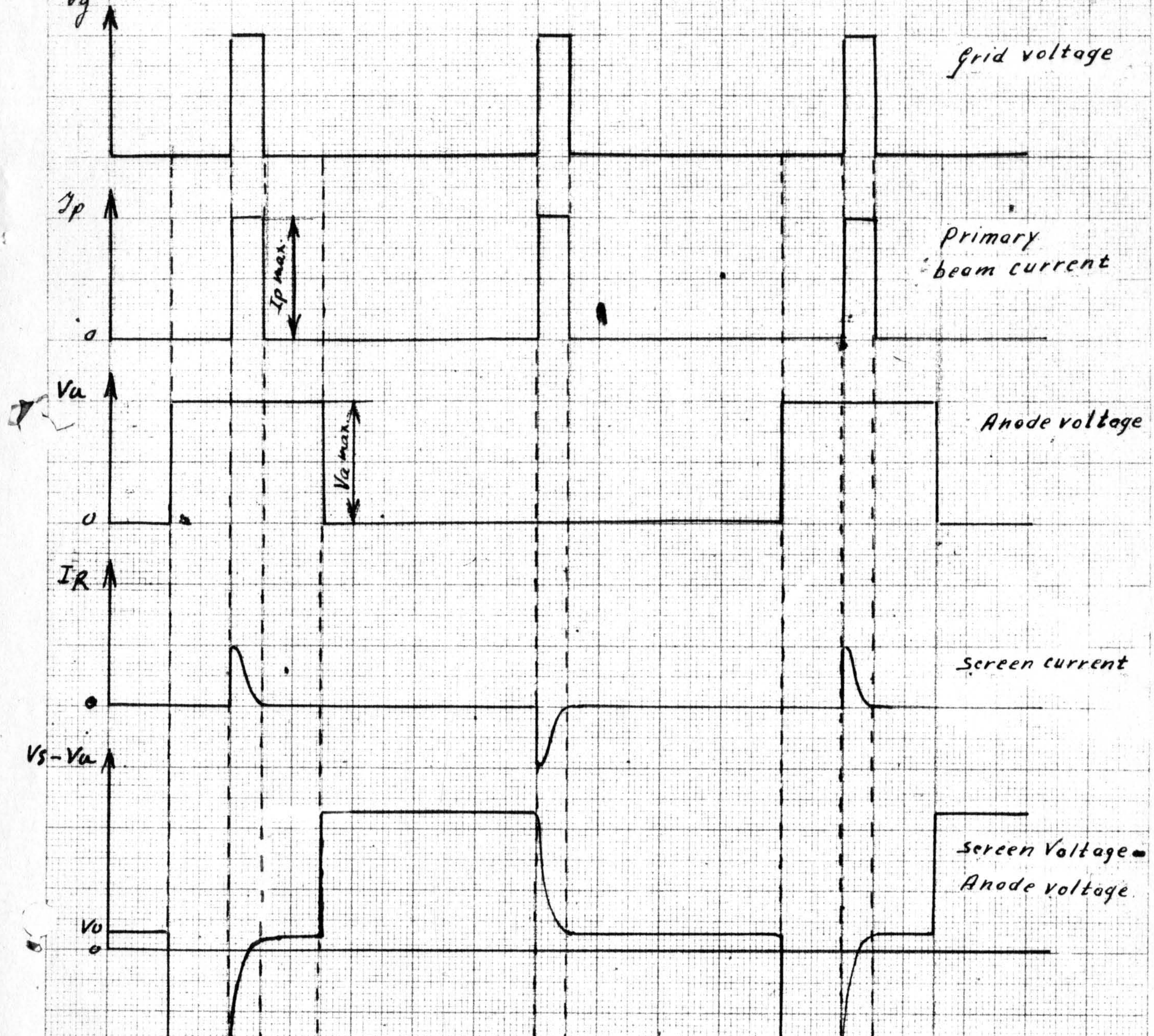
Vg
Grid voltage
Ip
0
Ip max.
Primary beam current
Va
0
Va max.
Anode voltage
I_R
0
Screen current
Vs-Va
V0
0
Screen Voltage - Anode voltage
D
0
Horizontal deflection Oscillograph
t0
t1
t2
t3
t4
t5
t6
t7
t8
t5
t6
t7
t8
t9
t10

Fig 7

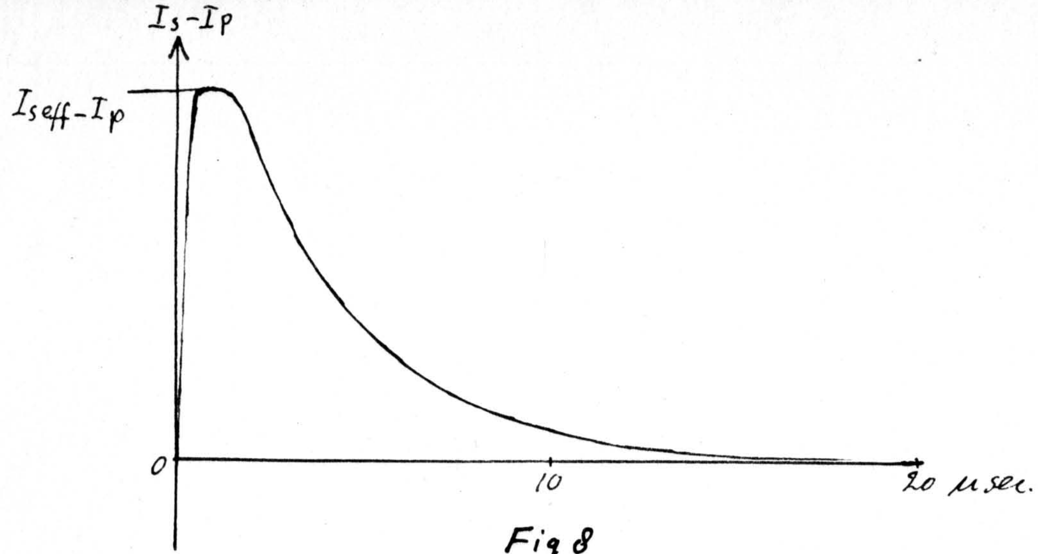

Fig 8

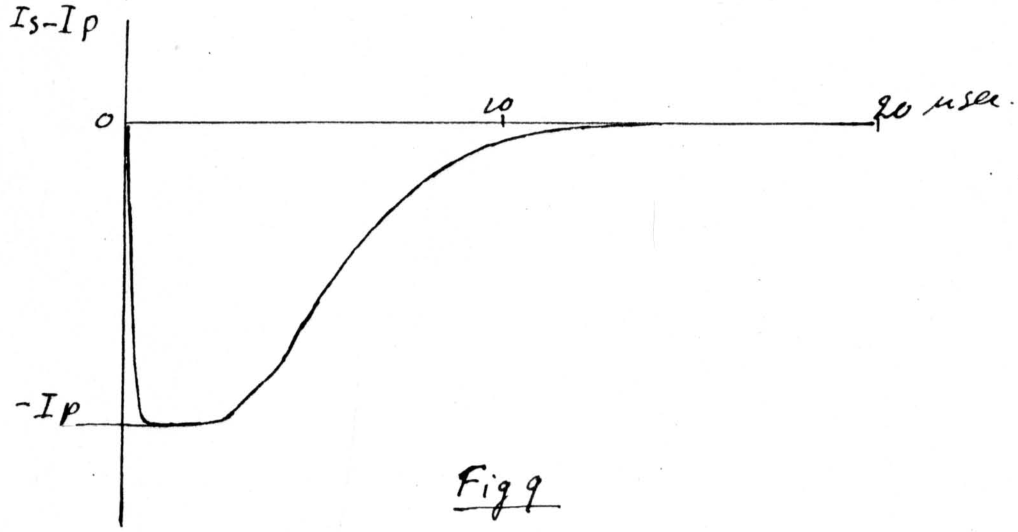

Fig 9

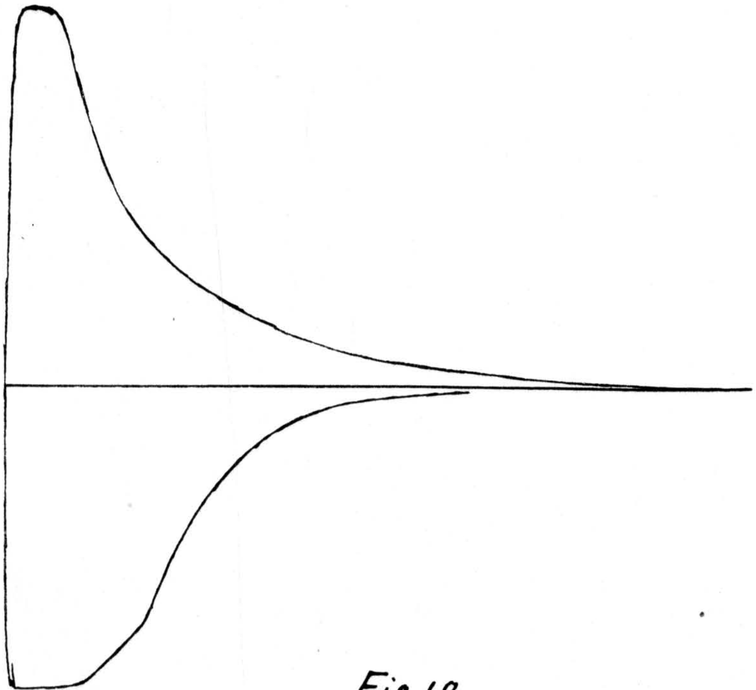

Fig 10

MW31.

$\delta = f(V_{ac})$

Fig 11.

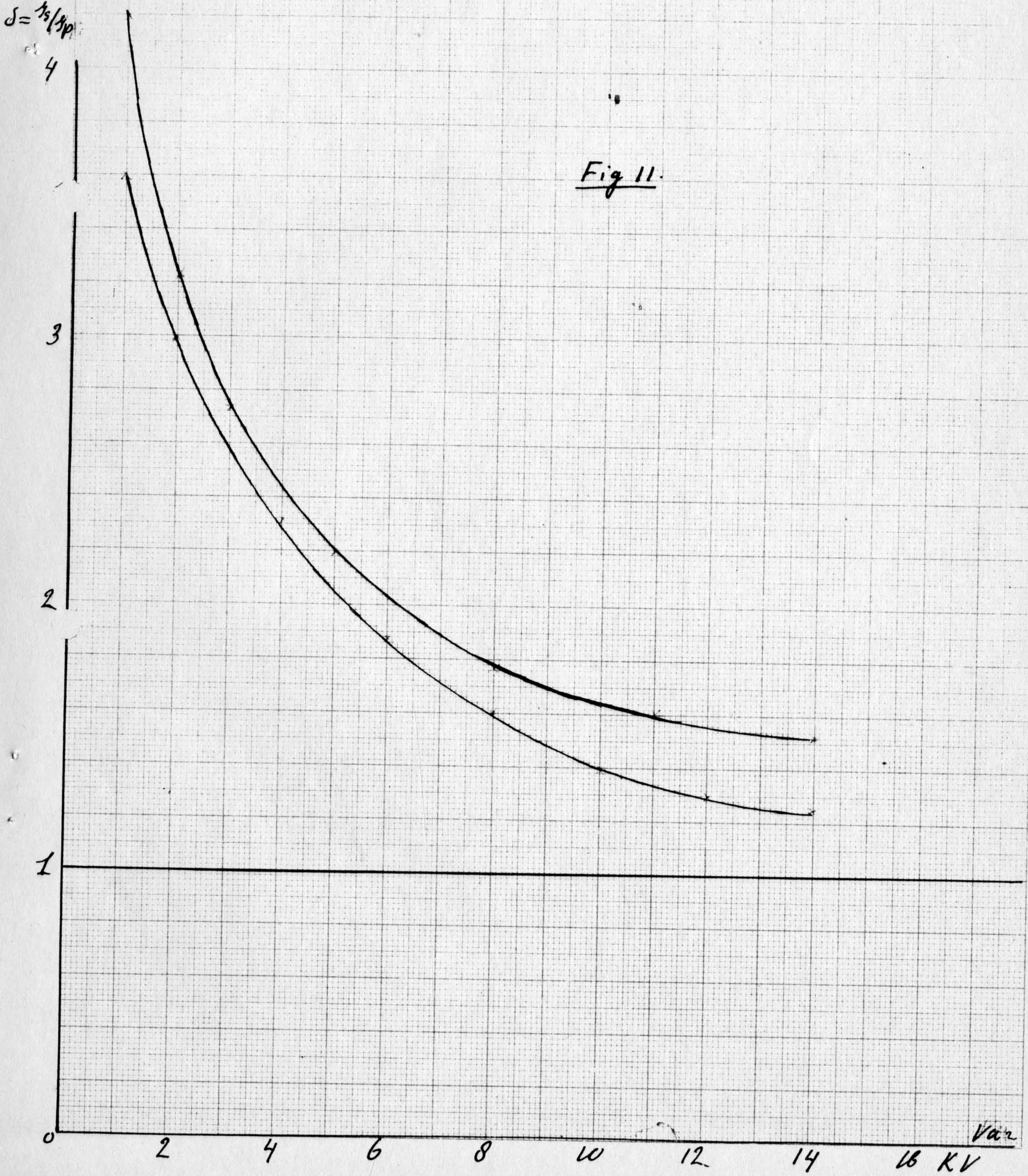

MW31-15

Tube nos. 2492 and 2493

Screened for 800 hours

Fig 12

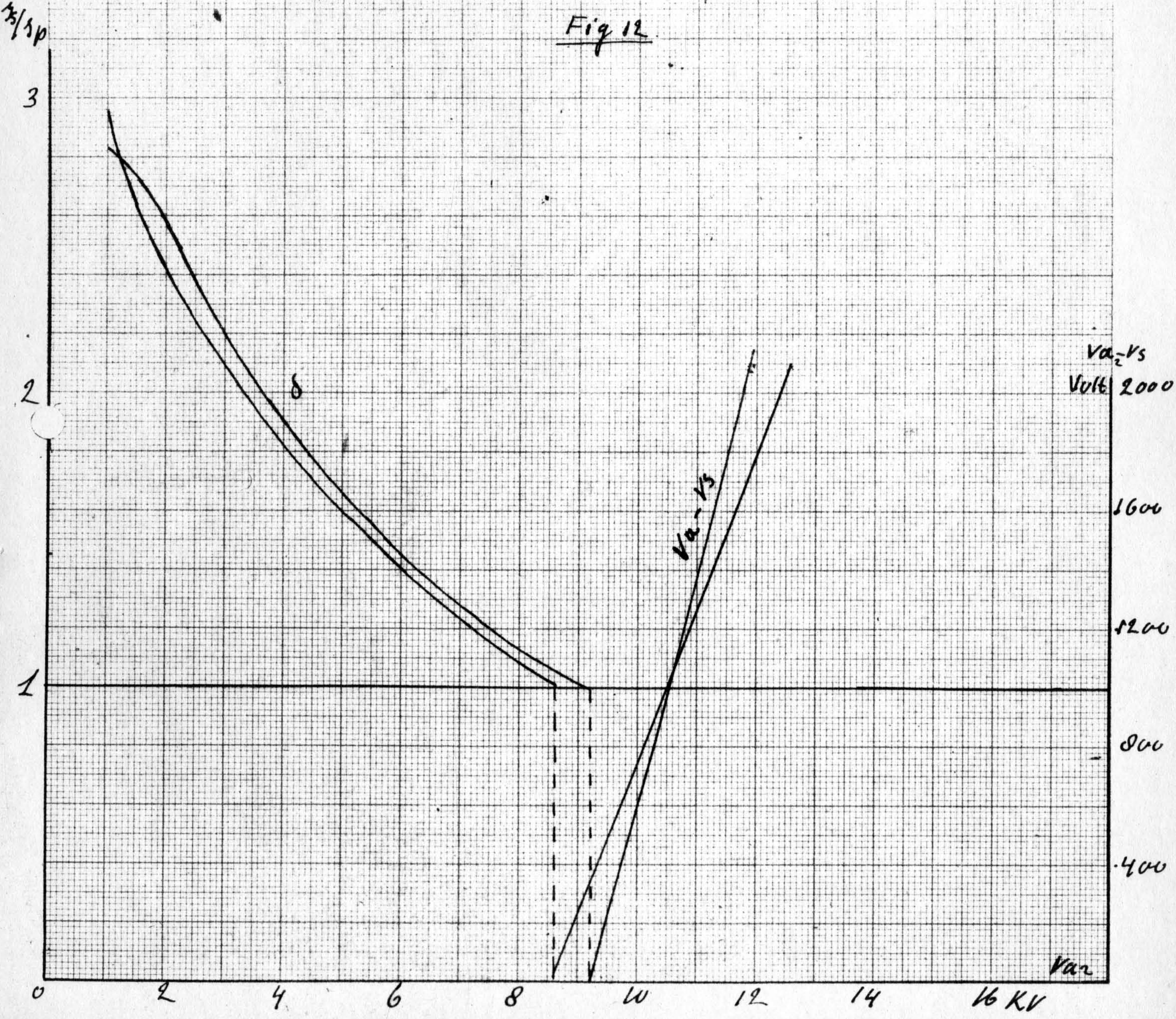

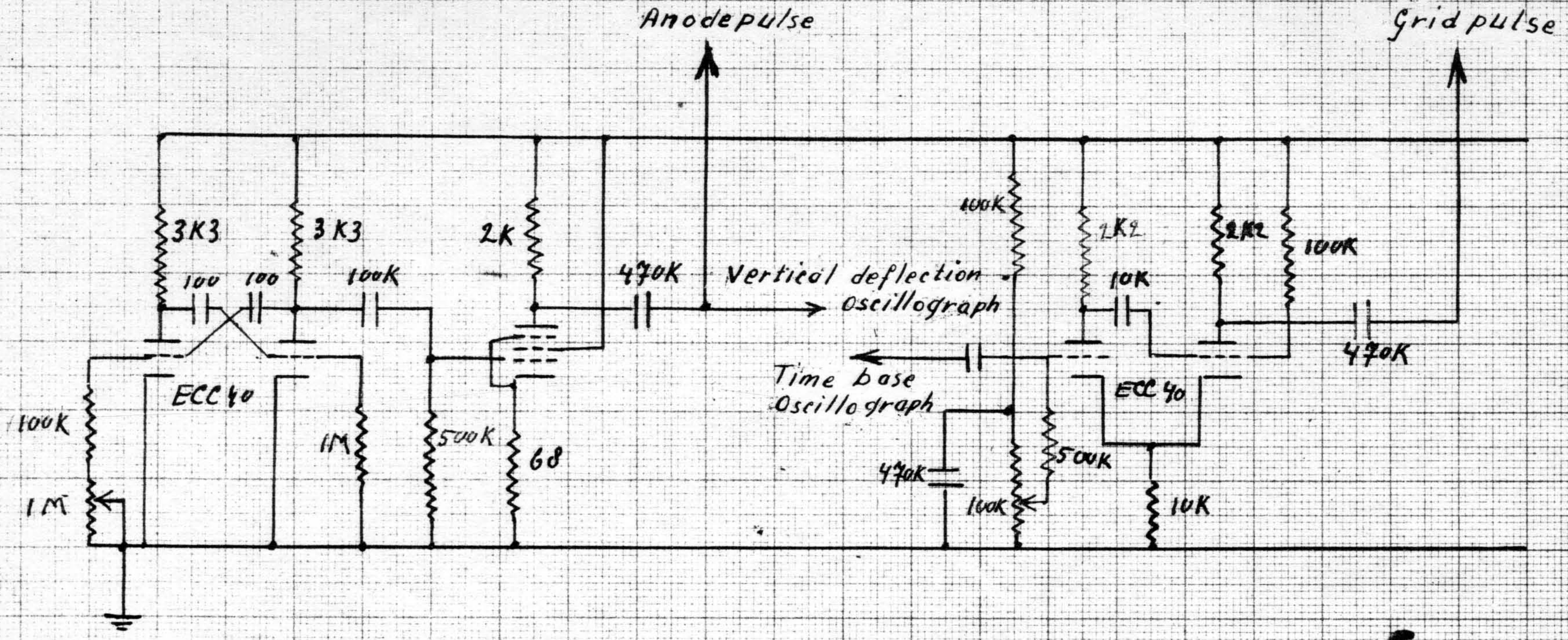
Anodepulse
Grid pulse
3K3
3K3
100
100
100K
2K
470K
Vertical deflection
Oscillograph
100K
2K2
10K
2K2
100K
470K
Time base
Oscillograph
ECC 40
ECC 40
100K
1M
1M
500K
68
470K
100K
500K
10K

Fig 13.

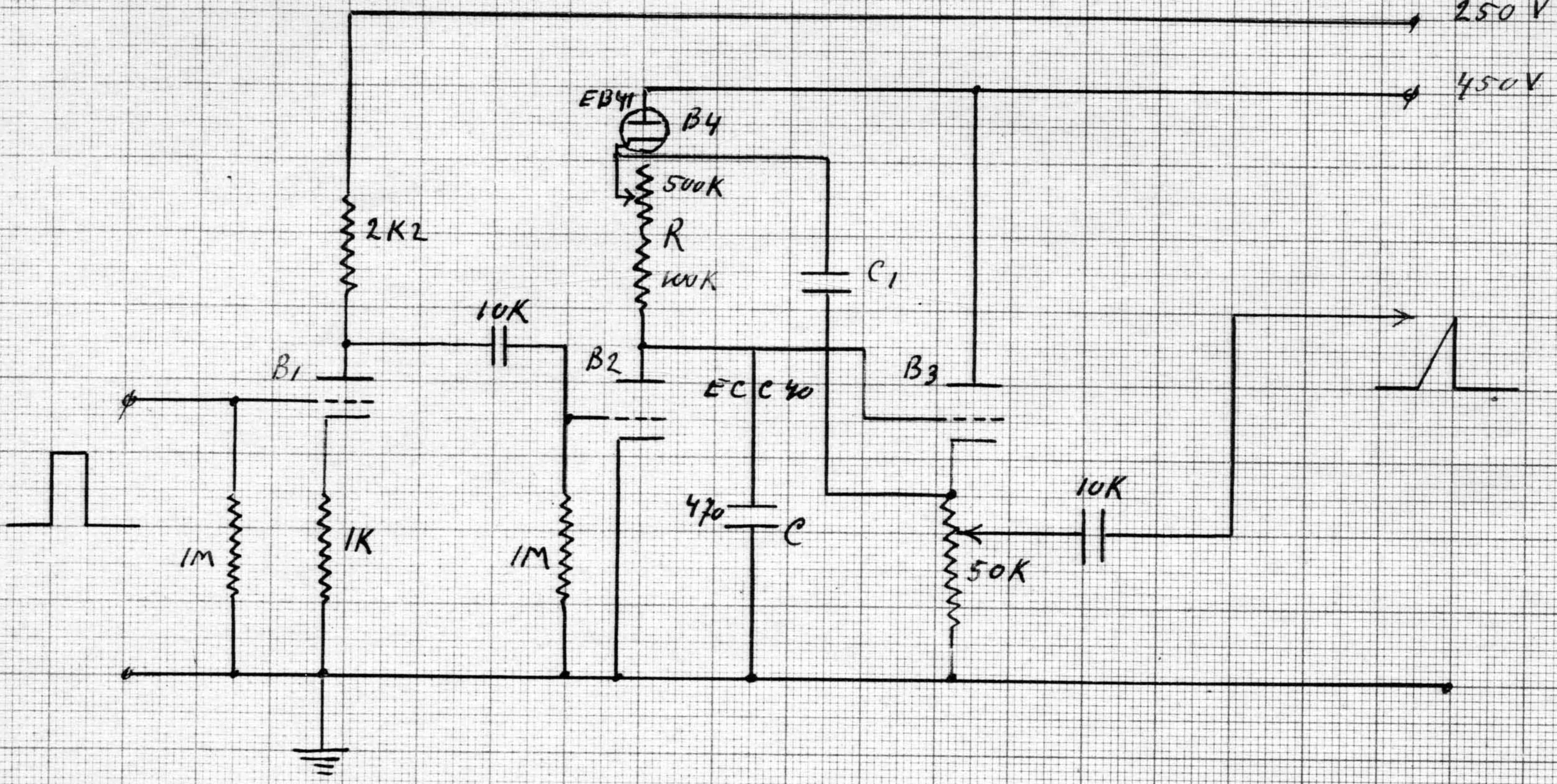
250 V
450V
EB41
B4
500K
R
100K
C1
2K2
10K
B1
B2
ECC40
B3
470
C
1M
1K
1M
50K
10K

Fig. 14

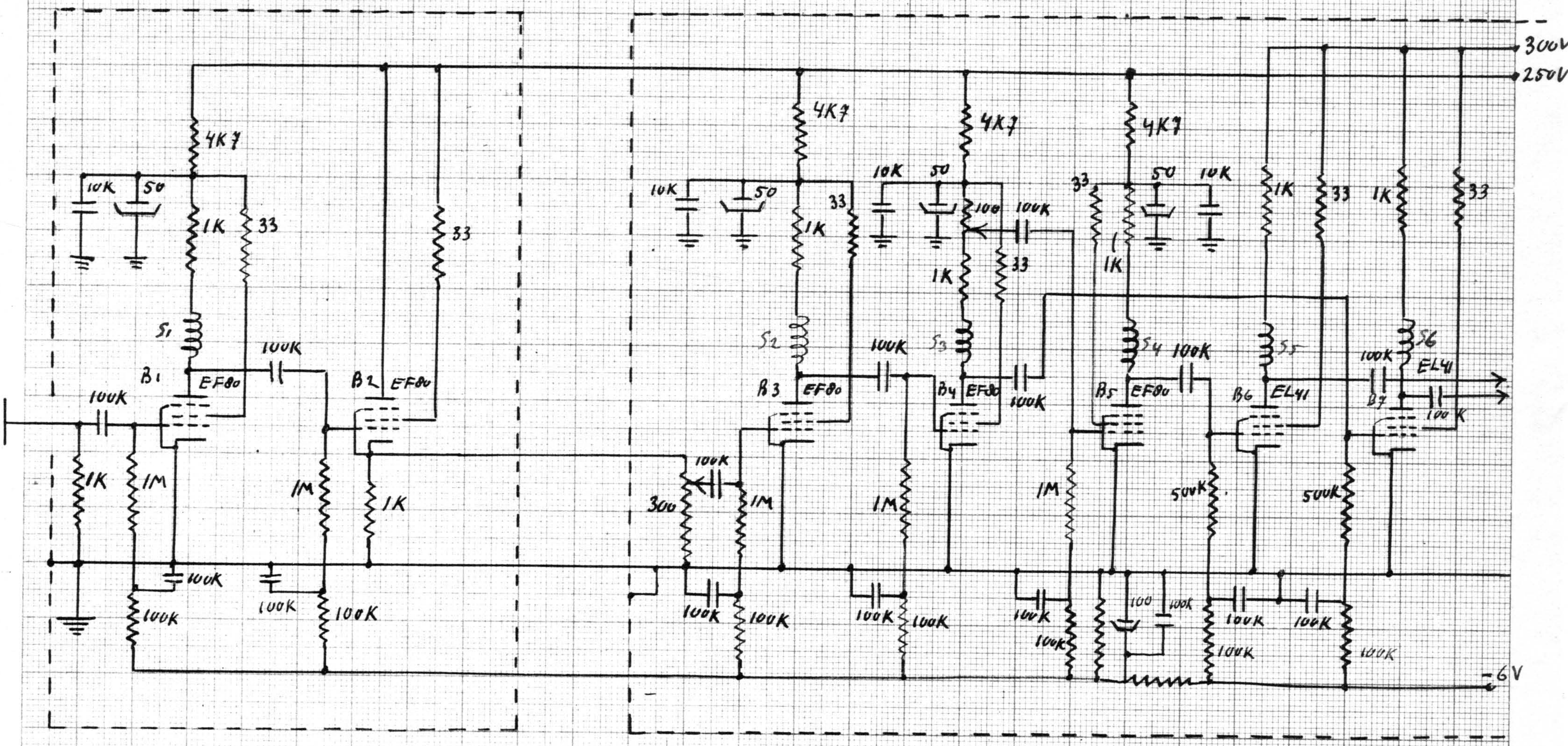

300V
250V
-6V
B1
EF80
S1
B2
EF80
B3
EF80
S2
B4
EF80
S3
B5
EF80
S4
B6
EL41
S5
B7
EL41
S6
4K7
4K7
4K7
4K7
10K
10K
10K
10K
50
50
50
50
1K
1K
1K
1K
1K
1K
1K
1K
1K
33
33
33
33
33
33
33
100
100
100
100K
100K
100K
100K
100K
100K
100K
100K
100K
100K
100K
100K
100K
100K
100K
100K
100K
100K
100K
100K
100K
100K
100K
100K
100K
1M
1M
1M
1M
1M
300
500K
500K

Fig. 15

ACK/RZ
8.10.'51.

Supplement to report No. 44, concerning "Measurement of secondary emission from fluorescent screens of picture tubes".

During the intensive use of the arrangement described in the above report, we have introduced some improvements, which are described below.

The pulse generator

In the report, it has been suggested, how to generate the grid and anode pulses, required to measure secondary emission of fluorescent screens. The method described, however, is rather cumbersome, because one requires two pulse generators, synchronized by means of an oscillograph. This synchronisation is not very stable and we have therefore designed a special pulse generator for this purpose which functions satisfactorily.
Fig. 1 shows a diagram as decribed in report 44, two pulses are used, one controlling the grid, and the other the anode screen potential of the tube under test.
The repetition frequency of the anode pulses is 2500 c/s; the frequency of the grid pulses is 5000 c/s.
Care should be taken to the proper phasing of the pulses with respect to each other.
The pulse generator of Fig. 1 comprises a master oscillator V1A, generating a sinusoidal voltage, the frequency being 2500 c/s.
This voltage is clipped by a pentode V_2, which squares the sine wave.
The following network with diode V3A differentiates this voltage and suppresses the negative part, giving the synchronizing pulses to the multivibration circuit of V_4.
This circuit generates rectangular pulses, which, after being amplified by V_5, are applied to the anode of the tube under test.
The duration of the pulses is 100 μ sec and their height about 150 Volts.
The circuit connected to V1B comprises two LC circuits, properly tuned to the second harmonic of the frequency of the master oscillator, which is coupled with a small capacitance to this circuit.
At the anode of V1B thus appears a sinusoidal voltage, frequency being 5000 c/s.
The remainder of the circuit from V_6 to V_9 has the same functions as that after V1A. At the anode of V_8 a pulse appears with a duration of 20 μ sec.; this pulse is applied to the grid of the tube under test.
The proper phasing of the pulses can be adjusted by means of a network, consisting of a resistor of 100 KΩ in series with a variable capacitor C, inserted between V1B and V_6.
The two output pulses are also applied to the grids of the double triode V_9. The mixed output voltage across the cathode resistor is led to an oscillograph, so that one can always observe the phasing and shape of the pulses.

Improvements of the measurement

In report 44, we stated that the tube to be examined is operated without focusing.
The measurement is possible because of the capacitance, formed by the phosphor layer and the metal plate against the bulb wall. According to formula (1) of report 44 this capacitance is proportional to the square of the diameter of the electron beam.

An increase of the anode - cathode voltage, causes the diameter of the beam and thus also the capacitance to decrease.
This phenomenon gives rise to an oscillogram that is difficult to measure at high anode - cathode voltages.
To avoid this, we now overfocus the beam during the measurement in such a way, that we always work with almost the same beam diameter (about 3 cm) on the screen, resulting in a well measurable oscillogram at high anode - cathode voltages.
Another practical improvement is the measuring scale before the oscillograph tube. We used for this a millimeter scale to measure the topheights of the two parts of the oscillogram and calculated δ from:

$$\delta = \frac{(I_s \text{ eff} - I_p) + I_p}{I_p}$$

$(I_s \text{ eff} - I_p)$ and I_p being proportional to the heights of the tops of the oscillogram.
By keeping I_p constant during the measurement and giving the scale at the dividing line the value 1 and the top I_p the value 0, one can read direct from the scale. (Fig. 2).

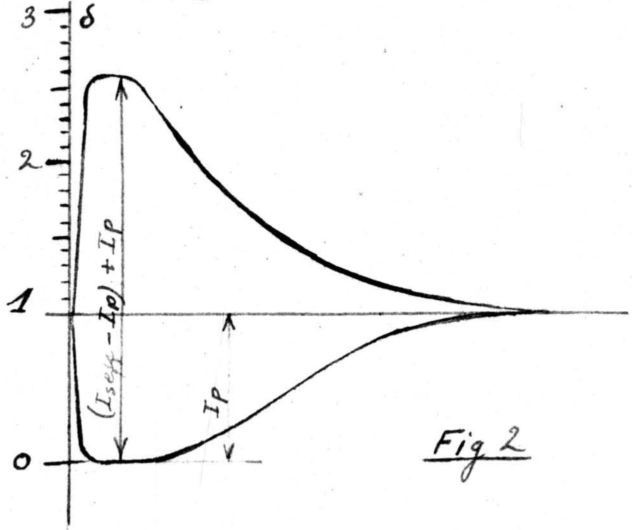

Fig 2

Accuracy of the measurement

The accuracy of the measurement is affected by the capacitance formed by the anode and the phosphor layer in the following way:
Taking this capacitance into account Fig. 3 shows the equivalent of the measuring circuit.

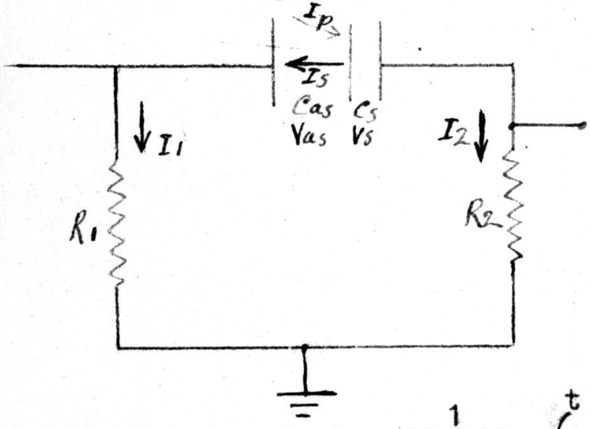

Fig 3

C_{a_s} = capacitance anode to phosphor.
C_s = capacitance phosphor to metal plate.
R_1 = resistance anode to earth.
R_2 = measuring resistance.

It appears from this diagram, that the change of the anode-screen potential V_{a_s} equals the change of the screen metal plate potential V_s; thus we may write:

$$\frac{1}{C_{as}} \int_0^t I_1 \, dt = \frac{1}{C_s} \int_0^t I_2 \, dt$$

or:

$$\frac{I_1}{C_{as}} = \frac{I_2}{C_s}$$

$$I_1 = \frac{C_{as}}{C_s} I_2 \qquad (1)$$

Since:

$$I_1 + I_2 = I_s - I_p$$

$$I_1 = I_s - I_p - I_2 \qquad (2)$$

Eliminating I_1 from (1) and (2) we have:

$$\frac{C_{as}}{C_s} I_2 = I_s - I_p - I_2$$

$$I_2 = \frac{I_s - I_p}{1 + \frac{C_{as}}{C_s}} \qquad (3)$$

It appears from (3), that we do not exactly measure $(I_s - I_p) . R_2$ across R_2 but:

$$\frac{I_s - I_p \cdot R_2}{1 + \frac{C_{as}}{C_s}}$$

being a smaller value.

Measurements of C_{as} and C_s show that $\frac{C_{as}}{C_s}$ amounts to approximately 0,03, thus

$$I_2 = \frac{I_s - I_p}{1{,}03}$$

As a consequence, we measure a fault of approximately 3%, but this can, if wanted be taken into account.

A.C. Kleisma.

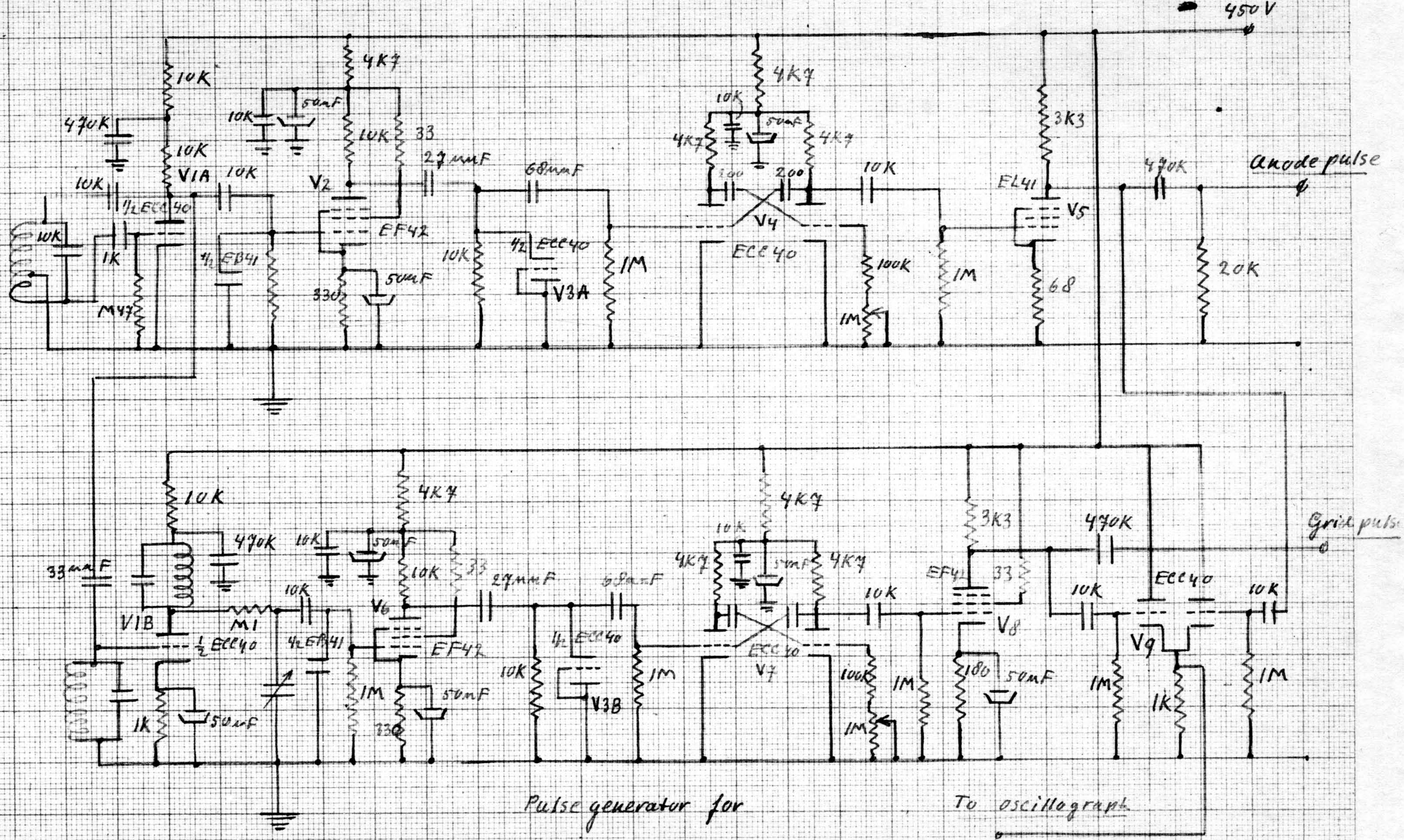

Pulse generator for secondary emission measurement.

Fig 1